LED Nixie Tube Driver and Keyboard Control Chip CH451

Datasheet
Version: 4E
http://wch.cn

1. Overview

CH451 is a multi-functional peripheral chip that integrates LED nixie tube display driver and keyboard scan control as well as μP monitoring. CH451 has a built-in RC oscillation circuit, which can dynamically drive 8-bit LED nixie tubes or 64 LEDs, with BCD decoding, flash, shift and other functions. It can also scan the keyboard with 64 keys. CH451 exchanges data with the MCU through the serial interface that can be cascaded, and provides the power on reset, watchdog and other monitoring functions.

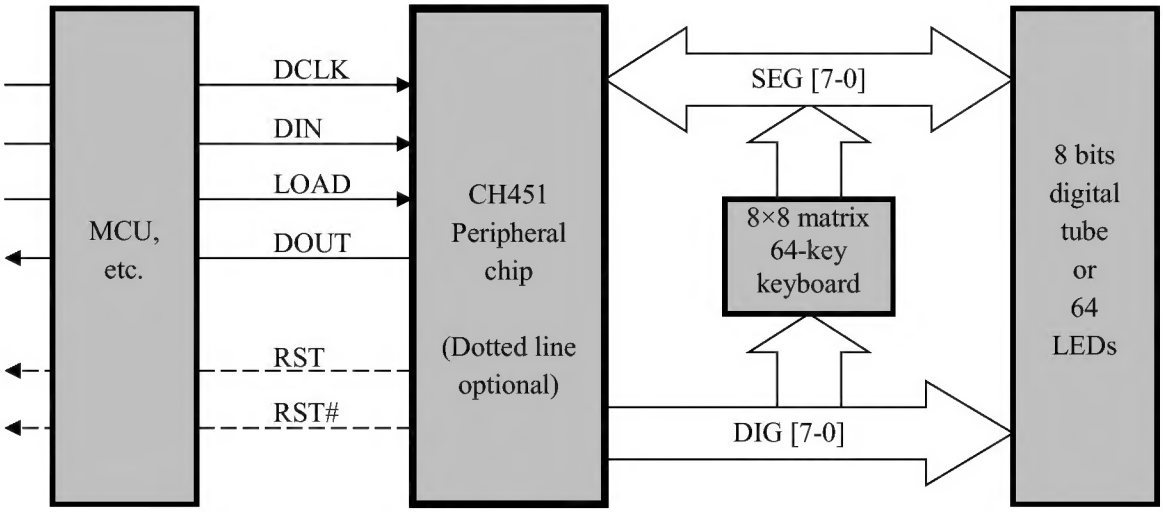

2. Features

2.1. Display Driver

- Built-in large current driving stage, segment current not less than 25mA, word current not less than 150mA.
- Dynamic display scanning control, direct drive of 8-bit LED nixie tubes or 64 LEDs.
- The corresponding non-decoding mode or BCD decoding mode can be selected for the segment and data bit of the LED nixie tube.
- Left shift, right shift, left cycle and right cycle of the LED nixie tube word data.
- Independent digital flash control of each LED nixie tube.
- Any segment addressing, independently control ON and OFF of each LED or each segment of each LED nixie tube.
- Provide 16-level brightness control through duty ratio setting.
- Support segment current upper limit adjustment, and all current limiting resistors can be removed.
- Scan limit control, support 1 ~ 8 LED nixie tubes, and allocate scan time only to the valid LED nixie tubes.

2.2. Keyboard Control

- Built-in 64-key keyboard controller, based on 8×8 matrix keyboard scan.
- Built-in pull-down resistor of key status input, built-in jitter suppression circuit.
- Keyboard interrupt, active at low level output.
- Provide key release flag bit for query key to be pressed down and released.

2.3. Others

- High speed 4-wire serial interface, support multichip cascade, clock speed from 0 to 10MHz.
- DIN and DCLK signal line in the serial interface can be shared with other interface circuits to save the pins.
- Completely built-in clock oscillator circuit, no external crystal or capacitance resistance oscillator is required.
- Built-in power on reset and Watch-Dog, providing reset output active at high level and active at low level.
- Support low-power sleep, save power, can be waked up by key or command operation.
- It supports 3V~5V supply voltage.
- Provide SOP28 and DIP24S lead-free packages, and be compatible with RoHS.
- The pins and functions are basically compatible with the CH452 chip with the 4-wire interface mode.

3. Package

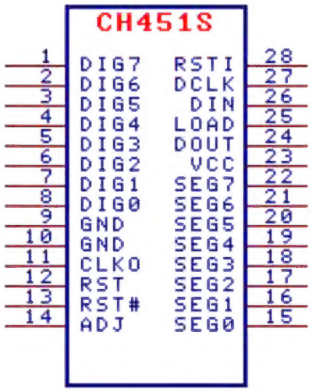

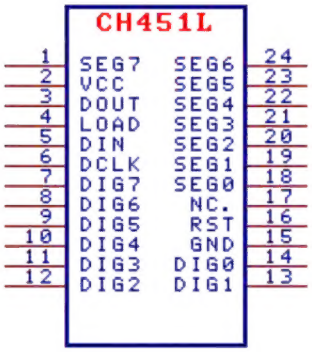

Package	Width		Pitch of Pin		Instruction of Package	Ordering information
SOP28	7.62mm	300mil	1.27mm	50mil	Standard 28-pin pin patch	CH451S
DIP24S	7.62mm	300mil	2.54mm	100mil	Narrow 24-pin dual in-line package	CH451L

Notes: Based on the considerations of the cost and supply cycle, chip packaging is recommended.

4. Pins

SOP28 Pin No.	DIP24S Pin No.	Pin Name	Type	Description
23	2	VCC	Power	Positive power, continuous current not less than 200mA
9	15	GND	Power	Common ground, continuous current not less than 200mA
25	4	LOAD	Input	Data loading of serial interface, built-in pull-up resistor
26	5	DIN	Input	Data input of serial interface, built-in pull-up resistor

27	6	DCLK	Input	Data clock of serial interface, built-in pull-up resistor Also used for watchdog clear input
24	3	DOUT	Output	Data output and keyboard interrupt of serial interface
22~15	1, 24~18	SEG7 ~SEG0	Three-status output and input	Segment drive of LED nixie tube, active at high level Keyboard scan input, active at high level, built-in pull-down resistor
1~8	7~14	DIG7 ~DIG0	Output	Word drive of LED nixie tube, active at low level Keyboard scan output, active at high level
12	16	RST	Output	Power on reset and watchdog reset, active at high level
13	None	RST#	Output	Power on reset and watchdog reset, active at low level
28	None	RSTI	Input	External manual reset input Active at high level, built-in pull-down resistor
14	None	ADJ	Input	Segment current upper limit is adjusted, built-in strong pull-down resistor
11	None	CLKO	Output	Internal system clock output
10	None	GND	Power	Recommended to connect GND
None	17	NC.	None	Unused, forbid to connect

5. Functional Specification

5.1. General Specification

For data in this manual, those ending with B are binary numbers and those ending with H are hexadecimal numbers. Otherwise, they are decimal numbers. The bit marked as x indicates that the bit can be any value.

CH451 is a multi-functional peripheral chip, which can exchange data with the MCU, DSP, microprocessor and so on through a 4-wire serial interface that can be cascaded. CH451 contains three functions: LED nixie tube display driver, keyboard scan control, and μP monitoring. The three functions are independent of each other, the MCU can enable, disable and set any function of CH451 through the operation commands. The serial interface of CH451 is realized by hardware, and the MCU can frequently carry out high-speed operation through the serial interface, without reducing the working efficiency of CH451.

5.2. Display Driver

CH451 uses dynamic scanning driver for the LED nixie tube and LED. The order is DIG0 to DIG7. When one pin sinks the current, the other pins do not sink the current. CH451 has internal large current driving stage, which can directly drive 0.5-inch to 2-inch common cathode LED nixie tube. The segment drive pins SEG6~SEG0 correspond to the segments G~A, the segment drive pin SEG7 corresponds to the decimal point of the LED nixie tube, and the word drive pins DIG7~DIG0 are respectively connected to the cathodes of 8 LED nixie tubes. CH451 can also be connected to an 8×8 matrix LED array or 64 independent LEDs, or CH451 can also be connected to an external inverse phase driver to support a common anode LED nixie tube, or connected to a high power valve to support a large-size LED nixie tube.

The CH451 supports scan limit control and allocates scan time only to the valid LED nixie tubes. When the scan limit is set to 1, the unique LED nixie tube DIG0 will get all the dynamic drive time, thus equating to

the static drive. When the scan limit is set to 8, the 8 LED nixie tubes DIG7~DIG0 will each get 1/8 of the dynamic drive time. When the scan limit is set to 4, the 4 LED nixie tubes DIG3~DIG0 will each get 1/4 of the dynamic drive time. At this time, the average drive current of each LED nixie tube will be doubled compared with the scan limit of 8, so reducing the scan limit can improve the display brightness of the LED nixie tube.

The CH451 further subdivides the display drive time allocated to each LED nixie tube into 16 equal segments, and supports 16-level brightness control by setting the display duty ratio. The value of duty ratio ranges from 1/16 to 16/16. The larger the duty ratio is, the larger the average drive current of the LED nixie tube is, and the higher the display brightness will be. However, the relation between the duty ratio and the display brightness is nonlinear.

CH451 has 8 8-bit data registers, which are used to store 8 word data, corresponding to 8 LED nixie tubes or 8 groups of LEDs driven by CH451, 8 LEDs in each group. CH451 supports left shift, right shift, left cycle and right cycle of the word data in the data register, and supports independent flash control of each LED nixie tube. During the left and right shift or left and right cycle movement of the word data, the properties of flash control will not move with the data.

CH451 works in non-decoding mode by default, and the bit 7~bit 0 of the word data in 8 data registers correspond to the decimal points and segments G~A of 8 LED nixie tubes respectively at this time. For LED array, the data bit of each word data uniquely corresponds to an LED. When the data bit is 1, the segment of the corresponding LED nixie tube or LED will be on. When the data bit is 0, the segment of the corresponding LED nixie tube or LED will be off. For example, the bit 0 of the third data register is 1, so the segment A of the corresponding third LED nixie tube is on. CH451 can also work in the decoding mode of BCD through setting, which is mainly used in the drive of LED nixie tube. As long as the MCU gives a binary BCD code, CH451 will directly drive the LED nixie tube to display the corresponding characters after decoding. BCD decoding mode refers to the BCD decoding for the bit 4 ~ bit 0 of the word data in the data register, control the output of the segment drive pins SEG6~SEG0, which is corresponding to the segment G ~ segment A of the LED nixie tube. At the same time, the bit 7 of the word data is used to control the output of the segment drive pin SEG7, which is corresponding to the decimal point of the LED nixie tube, and the bit 6 and bit 5 of the word data will not affect the BCD decoding. The following table shows the corresponding segments G ~ A and the characters displayed in the LED nixie tube after the BCD decoding of the bits 4 ~ 0 of the word data in the data register. Refer to the following table. If you need to display the character 0 on the LED nixie tube, just input the data 0xx00000B or 00H. If you need to display the character 0. (0 with decimal point), just input the data 1xx00000B or 80H. Similarly, data 1xx01000B or 88H corresponds to the character 8. (8 with decimal point). Data 0xx10011B or 13H corresponds to the character =. Data 0xx11010B or 1AH corresponds to the character. (decimal point). Data 0xx10000B or 10H corresponds to character (space, not displayed by the LED nixie tube).

Bit 4 ~ bit 0	Segment G ~ segment A	Displayed characters	Bit 4 ~ bit 0	Segment G ~ segment A	Displayed characters
00000B	0111111B	0	10000B	0000000B	space
00001B	0000110B	1	10001B	1000110B	-| -1 or plus
00010B	1011011B	2	10010B	1000000B	- minus
00011B	1001111B	3	10011B	1000001B	= equal sign
00100B	1100110B	4	10100B	0111001B	[left square bracket
00101B	1101101B	5	10101B	0001111B	] right square bracket
00110B	1111101B	6	10110B	0001000B	_ Underline

00111B	0000111B	7	10111B	1110110B	H
01000B	1111111B	8	11000B	0111000B	L
01001B	1101111B	9	11001B	1110011B	P
01010B	1110111B	A	11010B	0000000B	. decimal point
01011B	1111100B	b	Rest	0000000B	space
01100B	1011000B	c			
01101B	1011110B	d			
01110B	1111001B	E			
01111B	1110001B	F			

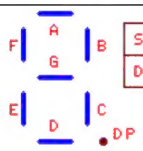

S7	S6	S5	S4	S3	S2	S1	S0
DP	G	F	E	D	C	B	A

SEG7-SEG0 与数码管

The following figure is the internal circuit diagram of CH451 segment drive pins SEG7 ~ SEG0.

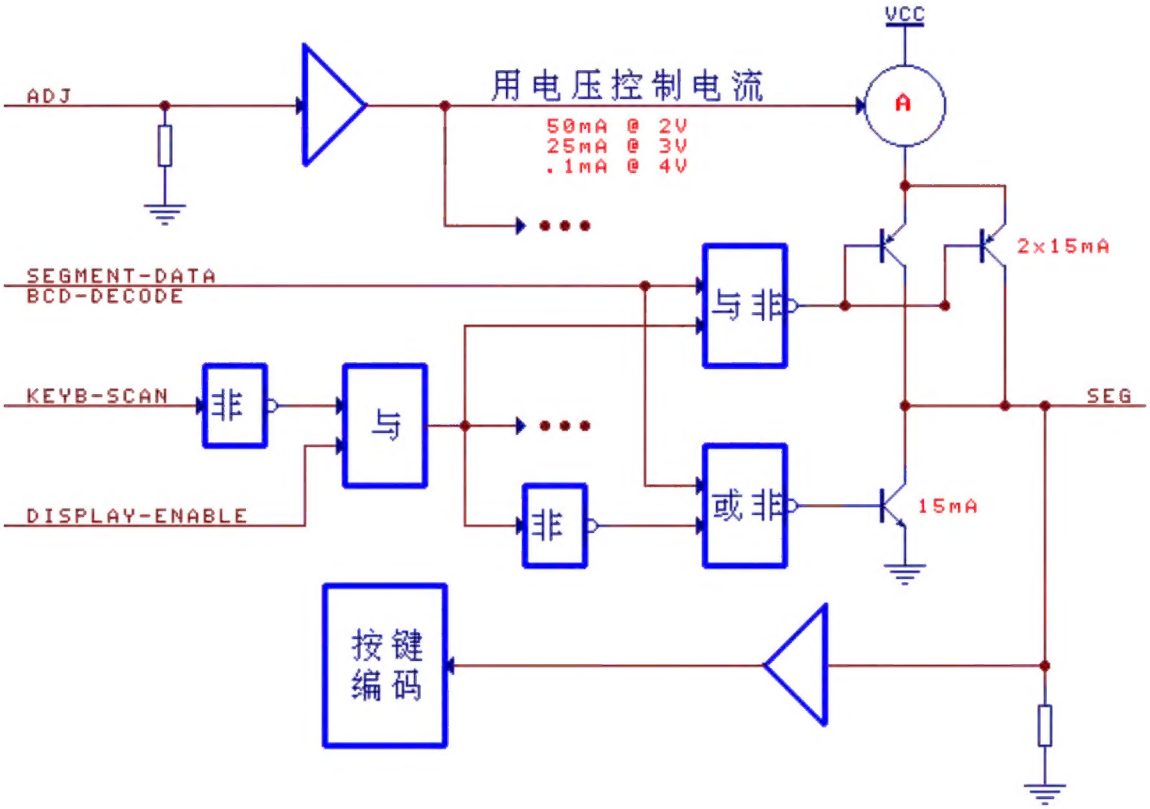

The following figure is the internal circuit diagram of CH451 word drive pins DIG7~DIG0.

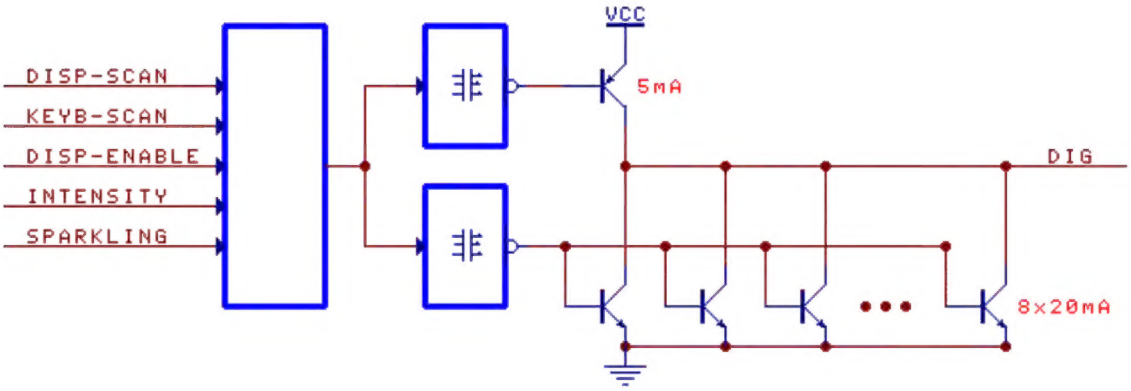

5.3. Keyboard Scan

CH451 keyboard scan feature supports an 8×8 matrix 64-key keyboard. During keyboard scan, pins DIG7~DIG0 are used for the column scan output, and SEG7~SEG0 pins have internal pull-down resistors for the line scan input. When keyboard scan is enabled, the function of the DOUT pin changes from data output of the serial interface to the keyboard interrupt and data output.

CH451 periodically inserts keyboard scan during the display driver scan. During keyboard scan, the pins DIG7~DIG0 output high level in sequence from DIG0 to DIG7, and the remaining 7 pins output low level. The outputs of the pins SEG7~SEG0 are disabled. When no key is pressed, SEG7~SEG0 are pulled down to low level. When a key is pressed, for example, the key connecting DIG3 and SEG4 is pressed, SEG4 detects high level when DIG3 outputs high level. In order to avoid error code caused by key jitter or external interference, CH451 performs two scans. Only when the results of two keyboard scans are the same, the key will be confirmed to be valid. If CH451 detects a valid key, the key code will be recorded, and active low keyboard interrupt will be generated through DOUT pin. At this time, the MCU can read the key code through the serial interface. CH451 does not generate any keyboard interrupt until a new valid key is detected. CH451 does not support combination key, that is, two or more keys cannot be pressed at the same time. If multiple keys are pressed at the same time, the key with the smaller key code will take precedence.

The key code provided by CH451 is 7-bit, bits 2~0 are column scan codes, bits 5~3 are line scan codes, and bit 6 is status code (1 when the key is pressed, 0 when the key is released). For example, when the key connecting DIG3 and SEG4 is pressed, the key code is 1100011B or 63H. After the key is released, the key code is usually 0100011B or 23H, where the column scan code corresponding to DIG3 is 011B, and the line scan code corresponding to SEG4 is 100B. The MCU can read the key code at any time, but it generally reads the key code when CH451 detects a valid key and produces keyboard interrupt. At this time, the bit 6 of the key code is always 1. In addition, if you need to know when the key is released, the MCU can read the key code regularly by inquiry until the bit 6 of the key code is 0.

The following table shows the key codes provided by CH451 when the key between DIG7 ~ DIG0 and SEG7 ~ SEG0 is pressed. These key codes have certain rules. If the key code when the key is released is needed, the bit 6 of the key code in the table should be set to 0, that is, the key code in the table is subtracted by 40H.

Key code	DIG7	DIG6	DIG5	DIG4	DIG3	DIG2	DIG1	DIG0
SEG0	47H	46H	45H	44H	43H	42H	41H	40H
SEG1	4FH	4EH	4DH	4CH	4BH	4AH	49H	48H
SEG2	57H	56H	55H	54H	53H	52H	51H	50H
SEG3	5FH	5EH	5DH	5CH	5BH	5AH	59H	58H
SEG4	67H	66H	65H	64H	63H	62H	61H	60H
SEG5	6FH	6EH	6DH	6CH	6BH	6AH	69H	68H
SEG6	77H	76H	75H	74H	73H	72H	71H	70H
SEG7	7FH	7EH	7DH	7CH	7BH	7AH	79H	78H

5.4. µP Monitoring

CH451 provides µP monitoring including power on reset and Watch-Dog. The reset input pins of MCU, DSP and microprocessor can be directly connected to RST pin or RST# pin of CH451 as required. When CH451 is energized or the watchdog overflows, RST pin outputs the reset pulse signal active at high level, and RST# pin outputs the reset pulse signal active at low level. The power on reset pulse signal of CH451 also acts on the internal circuit of CH451 chip, while the watchdog reset pulse signal does not act on the internal circuit of CH451 chip.

CH451 power on reset refers to the reset pulse generated during the power-on process (the process from the

power-off state to the normal power supply state). In order to reduce the power interference caused by the high drive current of CH451, when the printed circuit board (PCB) is designed, a set of power supply decoupling capacitors should be connected in parallel between positive and negative power supplies, which are close to CH451 chip , including at least one leaded multilayer ceramic capacitor or porcelain capacitor with capacity of not less than 0.1uF and one electrolytic capacitor with capacity of not less than 100uF.

After the watchdog function is enabled by CH451, as long as the level of clearing the input pin DCLK has no change, the watchdog timer will keep timing. When the overflow cycle is reached, the watchdog reset pulse signal will be generated. In order to avoid timing overflow and generate reset signal, the MCU should regularly change the level of DCLK and timely clear the watchdog timing. The CH451 watchdog timing can be cleared by any of the following operations: power on reset, manual reset of RSTI pin, DCLK from low to high, DCLK from high to low, etc. After the watchdog function is enabled, CH451 will output the watchdog reset pulse signal when the MCU is out of control and causes the level of DCLK is kept constant for a long time.

5.5. Serial Interface

The following is the block diagram.

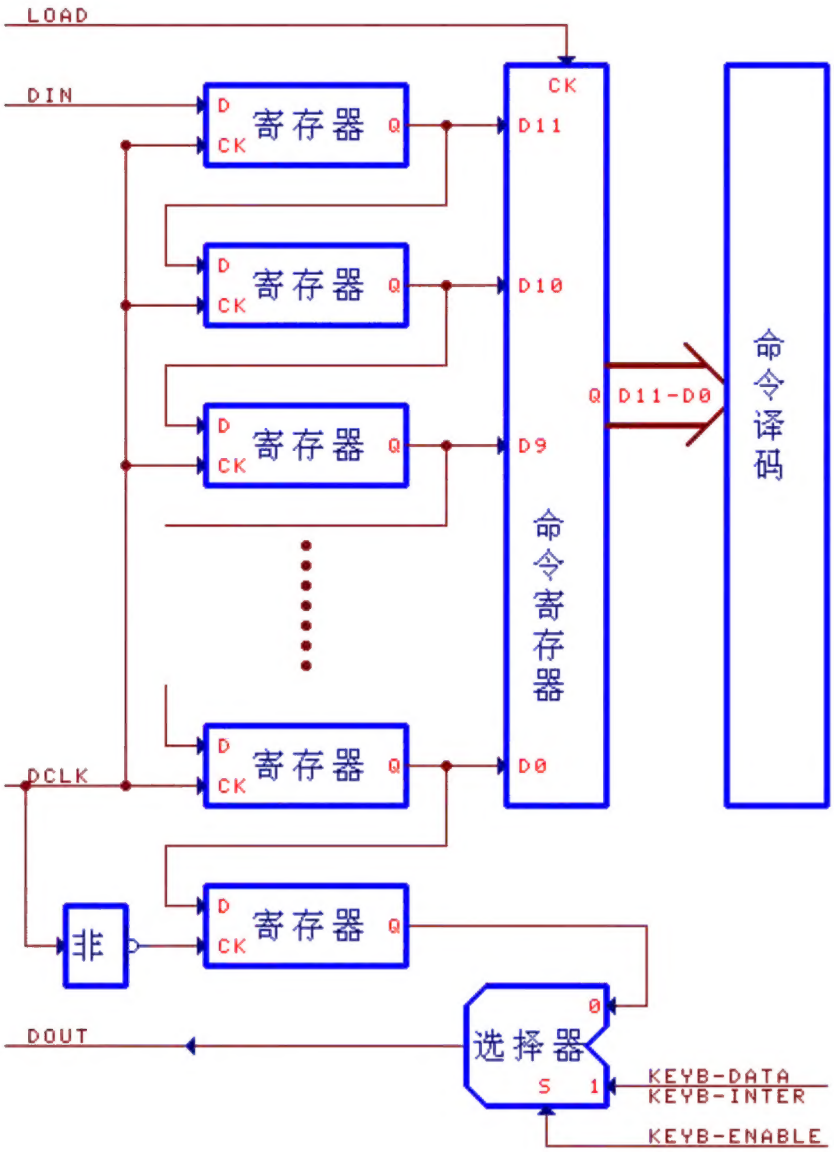

CH451 has a high speed 4-wire serial interface realized by hardware, including 4 signal lines: serial data input line DIN, serial data clock line DCLK, serial data load line LOAD, and serial data output line DOUT. Wherein, DIN, DCLK and LOAD are the input signal lines with a pull-up resistor and at high level by default. DOUT is the serial data output line when keyboard scan function is not enabled. When the keyboard scan function is enabled, it acts as a keyboard interrupt and data output line and at high level by default.

DIN is used to provide serial data. The high level represents bit data 1, and the low level represents bit data 0. The sequence of serial data input is that the low bit is at the front and the high bit is at the back. In addition, after the power on reset of CH451, the MCU must firstly output a low level pulse (from high level to low level and restore to high level) on DIN before the DCLK outputs the serial clock, and inform CH451 to enable the 4-wire serial interface.

DCLK is used to provide a serial clock, CH451 inputs data from DIN on its rising edge and outputs data from DOUT on its falling edge. CH451 has an internal 12-bit shift register. At the rising edge of DCLK, the bit data on DIN is shifted to the highest bit register of the shift register. And so on, the original low-bit data is shifted to the lowest bit register, and the original low-bit data is output from DOUT on the first falling edge after the rising edge. The CH451 allows DCLK pin to have a serial clock frequency higher than 10MHz, so as to realize high speed serial input and output.

LOAD is used to load the serial data, and CH451 loads the 12-bit data in the shift register on its rising edge, which is analyzed and processed as an operation command. In other words, the rising edge of LOAD is the frame completion flag of the serial data frame, at which point CH451 will regard the 12-bit data in the shift register as an operation command whether or not it is valid.

Since CH451 only loads the command data and processes it on the rising edge of LOAD, the MCU cannot use the LOAD signal line for other purposes, but DIN and DCLK can be used for other purposes. When the MCU I/O pin resources are limited, CH451 only needs to use the LOAD signal line exclusively, and DIN and DCLK signal lines can be shared with other interface circuits.

The following is the process that MCU outputs serial data to CH451 (not the only process, there can be a lot of changes):

① Output one bit of data, that is, output the lowest bit data B0 to DIN, and output the low level pulse (from high level to low level and resume to high level) to DCLK, including a rising edge to make CH451 input bit data;

② In the same way, output the bit data B1~B11;

③ Output low level pulse to LOAD, including a rising edge to make CH451 load serial data.

In this specification, B0^B1^B2^B3^B4^B5^B6^B7^B8^B9^B10^B11^↑ will be used as the simplified description of the above process, where ^ represents the rising edge of DCLK, ↑ represents the rising edge of LOAD, B0 ~ B11 represent 1 bit of data respectively. If it is character 0 or 1, it corresponds to the input bit data input of DIN, if it is character L or H, it corresponds to the output bit data 0 or 1 of DOUT. For example, 1^0^0^0^0^0^0^0^0^1^0^0^↑ represents a set of 12-bit serial data 001000000001B sent to CH451; 1^1^1^0^↑H^H^L^L^L^H^H^ represents that a set of 4-bit serial data 0111B is firstly sent to CH451, and then a set of 7-bit serial data 1100011B is received.

When keyboard scan function is not enabled, DOUT is used to output serial data, and the lowest bit data in the shift register always appears in the DOUT pin on the falling edge of DCLK. CH451 supports unlimited cascaded and can be connected to multiple CH451 chips with only 3 signal lines. Of which, DCLK of all CH451 are connected in parallel to the DCLK output of the MCU, LOAD of all CH451 are connected in parallel to the LOAD output of MCU, the DIN of CH451 in the post stage is connected to the DOUT output of CH451 in the front stage, and the DIN of CH451 in the foremost stage is connected to the DIN output of the MCU. In a cascade circuit, the serial data output by the MCU each time must be the digit of the serial data of a single CH451 multiplied by the series of the cascade. For example, the serial data of CH451 is 12

bits. If 3 CH451 are cascaded, the data bits output each time by the MCU must be 36 bits, which are the command data of the CH451 in the post stage, the command data of the CH451 in the intermediate stage and the command data of the CH451 in the front stage in sequence.

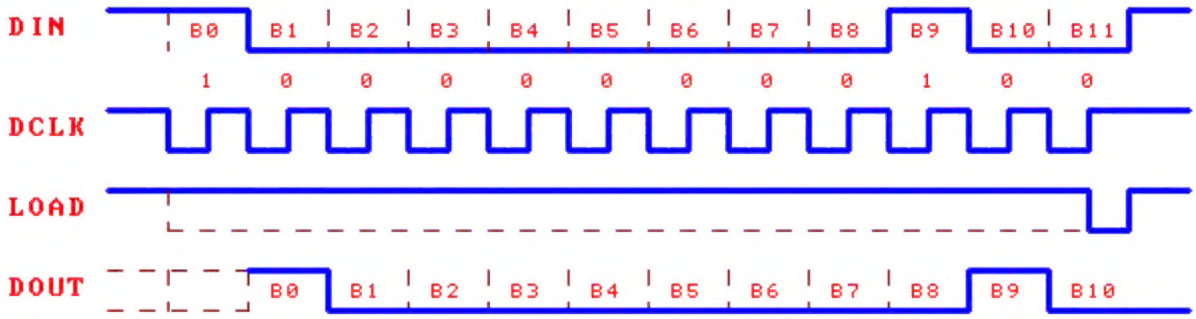

The figure above is a waveform diagram of the 12-bit data sent by the MCU to CH451 through a serial interface when the keyboard scan function is not enabled. The data is 001000000001B, and the low level pulse of LOAD can be wider, which is represented by the dotted line in the figure.

When the keyboard scan function is enabled, DOUT is used for keyboard interrupt and data output and is at high level by default. When CH451 detects a valid key, DOUT will output the keyboard interrupt active at low level. When the MCU is interrupted, it will send the command to read the key code, and CH451 will output the highest bit of the 7-bit key code from DOUT after the rising edge of LOAD. The MCU will continue to output the serial clock, on each falling edge of DCLK, CH451 will output the remaining 6 bits in the 7 bits of the key code from DOUT successively, with the sequence of high bit in front and low bit in rear. After the 7 bits of key code are output, CH451 will restore DOUT to the default high level no matter how the DCLK changes. Refer to the figure below, the process of the MCU obtaining the key code from CH451 is as follows:

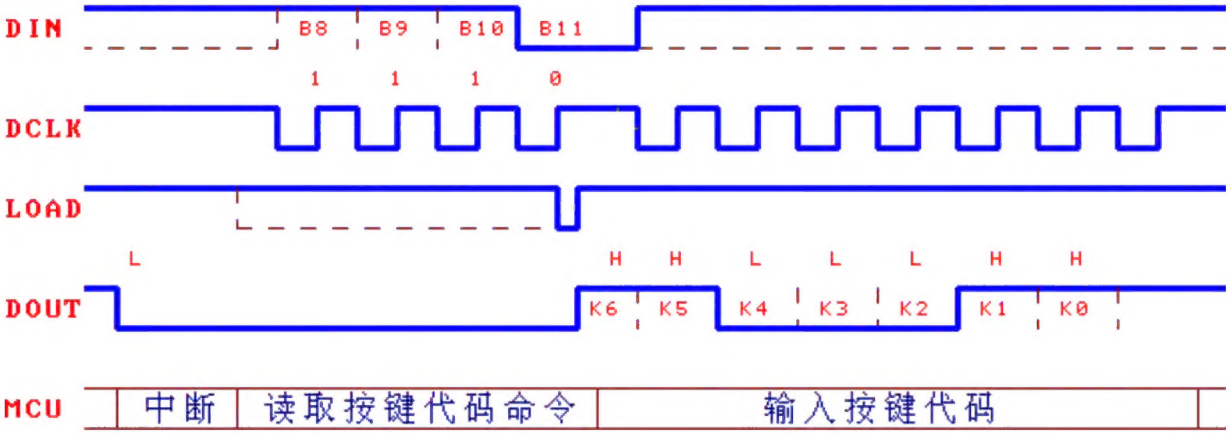

① Output one-bit data, that is, output the lowest bit data B0 of the reading key code command to DIN, and output the low level pulse to DCLK;

② In the same way, output the bit data B1~B11 of the reading key code command;

③ Output low level pulse to LOAD, including a rising edge to make CH451 load the serial data. According to the analysis by CH451, it reads the key code command and immediately outputs the highest bit data K6 of the key code in DOUT;

④ Read one-bit data, that is, input the highest bit data K6 of the key code from DOUT, and output the low level pulse to DCLK;

⑤ In the same way, input the bit data K5~K0 of the key code.

In fact, only the bit data B8~B11 is valid in the key code command read by CH451, so it is not necessary for the MCU to send the read key code command B0~B7. For example, if the key code is 63H, the simplified

description of the above process is 1^1^1^0^ ↑ H^H^L^L^L^H^H^, that is, send the read key code command 0111xxxxxxxxB to CH451, and then receive the key code 1100011B from DOUT. The figure above is the waveform diagram of the MCU sending commands to CH451 and receiving key codes. MCU refers to the working state of the MCU.

6. Operation Commands

The CH451 operation commands are all 12 bits. The 12-bit serial data corresponding to each operation command of CH451 is listed in the table below. Among, the bit marked with x indicates that this bit can be any value. The bit marked with a name indicates that the bit has a corresponding register in the CH451 chip, and its data changes according to different operation commands.

Operation command	Bit 11	Bit 10	Bit 9	Bit 8	Bit 7	Bit 6	Bit 5	Bit 4	Bit 3	Bit 2	Bit 1	Bit 0
Blank operation	0	0	0	0	x	x	x	x	x	x	x	x
Segment addressing clear to 0	0	0	0	1	1	0	BIT_ADDR					
Segment addressing set to 1	0	0	0	1	1	1	BIT_ADDR					
Chip internal reset	0	0	1	0	0	0	0	0	0	0	0	1
Enter sleep state	0	0	1	0	0	0	0	0	0	0	1	0
Set auxiliary parameters	0	0	1	0	1	0	1	0	0	0	0	LMTC
Word data left shift	0	0	1	1	0	0	0	0	0	0	0	0
Word data right shift	0	0	1	1	0	0	0	0	0	0	1	0
Word data left cycle	0	0	1	1	0	0	0	0	0	0	0	1
Word data right cycle	0	0	1	1	0	0	0	0	0	0	1	1
Set system parameters	0	1	0	0	0	0	0	CKHF	DPLR	WDOG	KEYB	DISP
Set display parameters	0	1	0	1	MODE	LIMIT			INTENSITY			
Set flash control	0	1	1	0	D7S	D6S	D5S	D4S	D3S	D2S	D1S	D0S
Load word data 0	1	0	0	0	DIG_DATA, the corresponding word data of DIG0							
Load word data 1	1	0	0	1	DIG_DATA, the corresponding word data of DIG1							
Load word data 2	1	0	1	0	DIG_DATA, the corresponding word data of DIG2							
Load word data 3	1	0	1	1	DIG_DATA, the corresponding word data of DIG3							
Load word data 4	1	1	0	0	DIG_DATA, the corresponding word data of DIG4							
Load word data 5	1	1	0	1	DIG_DATA, the corresponding word data of DIG5							
Load word data 6	1	1	1	0	DIG_DATA, the corresponding word data of DIG6							
Load word data 7	1	1	1	1	DIG_DATA, the corresponding word data of DIG7							

Read key code	0	1	1	1	x	x	x	x	x	x	x	x

6.1. Blank Operation: 0000xxxxxxxxB

The blank operation command has no effect on CH451. This command can be used in the application with multiple CH451 cascades to send the operation commands to the CH451 in the post stage through the CH451 in the front stage without affecting the state of the front. For example, if the operation command 001000000001B needs to be sent to the CH451 in the post stage (DIN of CH451 in the post stage is connected to DOUT of CH451 in the front stage) in the two-stage cascade circuit, only the blank operation command 000000000000B needs to be added and then sent after this command. The simplified description is 1^0^0^0^0^0^0^0^0^1^0^0^0^0^0^0^0^0^0^0^0^0^0^↑, then the operation command will reach the CH451 in the post stage via the CH451 in the front stage, while the blank operation command is left for the CH451 in the front stage. In addition, in order to change the DCLK to clear the watchdog timing without affecting CH451, it is also possible to send the blank operation command. In the non-cascade application, the blank operation command can only send the valid data B8~B11, and the simplified description is 0^0^0^0^↑.

6.2. Segment Addressing Clear to 0: 000110[BIT_ADDR]B

The segment addressing clear to 0 command is used to turn off the LEDs at the specified address (or the designated segment or decimal point of the LED nixie tubes). This command can only turn off one LED at the specified address at a time and does not affect the status of other LEDs at all. Refer to the Matrix Addressing Table below for the addressing order of the segment addressing. For example, the command data 000110111010B represents that the LED addressed to 3AH is OFF.

Matrix addressing	DIG7	DIG6	DIG5	DIG4	DIG3	DIG2	DIG1	DIG0
SEG0	38H	30H	28H	20H	18H	10H	08H	00H
SEG1	39H	31H	29H	21H	19H	11H	09H	01H
SEG2	3AH	32H	2AH	22H	1AH	12H	0AH	02H
SEG3	3BH	33H	2BH	23H	1BH	13H	0BH	03H
SEG4	3CH	34H	2CH	24H	1CH	14H	0CH	04H
SEG5	3DH	35H	2DH	25H	1DH	15H	0DH	05H
SEG6	3EH	36H	2EH	26H	1EH	16H	0EH	06H
SEG7	3FH	37H	2FH	27H	1FH	17H	0FH	07H

6.3. Segment Addressing Set to 1: 000111[BIT_ADDR]B

The segment addressing set to 1 command is used to turn on the LEDs at the specified address (or the designated segment or decimal point of the LED nixie tubes). This command can only turn on one LED at the specified address at a time and does not affect the status of other LEDs at all. Refer to the Matrix Addressing Table for the addressing order of the segment addressing. For example, the command data 000111000110B represents that the LED addressed to 06H is ON.

6.4. Chip Internal Reset: 001000000001B

The internal reset command restores the registers and parameters of CH451 to the default state. When the chip is powered on, CH451 is always reset. At this time, all registers are reset to 0 and all parameters are restored to the default values.

6.5. Entering Sleep State: 001000000010B

The command to enter sleep state causes the CH451 to pause display driver and keyboard scan, and enter the low-power sleep state, thus saving electricity. Before the execution of this command, the display drive

enable and key scan enable of CH451 should be turned off with the command of setting system parameters, the execution of the command itself must be completed within 20uS, and the DCLK pin must remain unchanged after the command is sent.

CH451 in low-power sleep state can be woken up by any of the following two events. The first event is the detection of keys on SEG3~SEG0, and the valid key code is 40H to 5FH. The second event is the reception of the operation command (usually the blank operation command) sent by the MCU, or the detection of the status change of DCLK pin. Sleep and wake up operations themselves do not affect the working state of CH451.

6.6. Set Auxiliary Parameters: 00101010000[LMTC]B

"Set Auxiliary Parameters Command" is used to set the auxiliary parameters of CH451: segment current limit LMTC. By default, there is no upper limit for the segment output current, and the actual short-circuit current can reach above 80mA. When the current limit of LMTC segment is set to 1, the output current of SEG segments in CH451 will be limited to 30mA, so that 8 serial current limiting resistors between the segment drive pins and the LED nixie tubes can be removed.

6.7. Word Data Left Shift: 001100000000B

The word data left shift command shifts the word data of CH451 to the left once, that is, moves one bit from DIG0 to DIG7, and then complement the data 00H to the right-most DIG0. For example, when the LED nixie tube DIG7 ~ DIG0 displays "87654321", if the left shift command of the word data is executed, and the display will change to "7654321" (non-decoding mode) or "76543210" (BCD decoding mode).

6.8. Word Data Right Shift: 001100000010B

The word data right shift command shifts the word data of CH451 to the right once, that is, moves one bit from DIG7 to DIG0, and then complement the data 00H to the right-most DIG7. For example, when the LED nixie tube DIG7 ~ DIG0 displays "87654321", if the right shift command of the word data is executed, and the display will change to "8765432" (non-decoding mode) or "08765432" (BCD decoding mode).

6.9. Word Data Left Cycle: 001100000001B

The word data left cycle command cycles the word data of CH451 to the left once, that is, moves one bit from DIG0 to DIG7, and then complement the original data in DIG7 to the right-most DIG0. For example, when the LED nixie tube DIG7 ~ DIG0 displays "87654321", if the left cycle command of the word data is executed, and the display will change to “76543218”.

6.10. Word Data Right Cycle: 001100000011B

The word data right cycle command cycles the word data of CH451 to the right once, that is, moves one bit from DIG7 to DIG0, and then complement the original data in DIG0 to the left-most DIG7. For example, when the LED nixie tube DIG7 ~ DIG0 displays "87654321", if the right cycle command of the word data is executed, and the display will change to “18765432”.

6.11. Set System Parameters: 0100000[CKHF][DPLR][WDOG][KEYB][DISP]B

"Set System Parameters Command" is used to set the system-level parameters of CH451: output high frequency clock CKHF (select fast blink), word drive output polarity DPLR (select DIG word drive output polarity: 0= active at low level. 1= active at high level), watchdog enable WDOG, keyboard scan enable KEYB, display driver enable DISP. Each parameter is controlled by 1 bit of data. If the corresponding data bit is set to 1, this function will be enabled; otherwise, it will be disabled (the default value). For example: Command data 010000000011B represents that select low frequency clock, turn off watchdog function, enable keyboard scan function, enable display scan driver function, and the word drive is active at low level.

6.12. Set Display Parameters: 0101[MODE][LIMIT][INTENSITY]B

"Set Display Parameters Command" is used to set the display parameters of CH451: decoding MODE, scanning LIMIT, and display INTENSITY. Decoding MODE is controlled by 1-bit data. BCD decoding mode is selected when it's set to 1, and non-decoding mode (default value) is selected when it's set to 0. The scan limit is controlled by 3-bit data and the scan limit of data 001B~111B and 000B is set as 1~7 and 8 respectively (default value). The display brightness INTENSITY is controlled by 4-bit data, and the display drive duty ratio of data 0001B~1111B and 0000B is set as 1/16~15/16 and 16/16 respectively (default value). For example, the command data 010101110000B represents the selection of non-decoding mode, the scanning limit is 7, and the duty ratio of display driver is 16/16. The command data 010110001010B represents the BCD decoding mode, the scanning limit is 8, and the duty ratio of display driver is 10/16.

6.13. Set Flash Control: 0110[D7S][D6S][D5S][D4S][D3S][D2S][D1S][D0S]B

"Set Flash Control Command" is used to set the flash display property of CH451: D7S~D0S correspond to 8 word drive DIG7~DIG0 respectively. The flash property D7S~D0S is controlled by 1-bit data respectively. When the corresponding data bit is set to 1, enable flash display, otherwise it is the normal display without flash (default value). For example: the command data 011000100001B represents that set the flash display of the LED nixie tubes DIG5 and DIG0, and the rest of the LED nixie tubes are normally displayed without flash.

6.14. Load Word Data: 1[DIG_ADDR][DIG_DATA]B

"Word-data loading command" is used to write the word data DIG_DATA to the data register at the specified address DIG_ADDR. DIG_ADDR specifies the address of the data register through 3-bit data. Data 000B~111B specify the addresses 0 ~ 7 respectively, corresponding to 8 LED nixie tubes driven by the pins DIG0~DIG7. DIG_DATA is 8-bit word data. For example, the command data 100001111001B represents that write the word data 79H into the first data register. If it is the non-decoding mode, then the LED nixie tube driven by DIG0 pin will display E. The command data 110010001000B represents that the word data 88H is written into the 5th data register. If it is the BCD decoding mode, the LED nixie tube driven by DIG4 pin will display 8.

6.15. Read Key Code: 0111xxxxxxxxB

"Read Key Code Command" is used to get the code for the valid key that CH451 recently detects. This command is the only one with data return. CH451 outputs the key code from the DOUT pin. The key code is always 7-bit data, with the highest bit as the status code, and the bits 5 ~ 0 as scan codes. The bit data B0 ~ B7 of read key code command can be any value, so the MCU can shorten the operation command to 4-bit data B8 ~ B11. For example, if CH451 detects a valid key and interrupts, with the key code of 5EH, the simplified description 1^1^1^0^↑H^L^H^H^H^H^L^ indicates that firstly send out the read key code command 0111xxxxxxxxB to CH451, and then obtain the key code 5EH from DOUT.

7. Parameters

7.1. Absolute Maximum Value

Critical value or exceeding the absolute maximum value may cause the chip to work abnormally or even be damaged.

Name	Parameter description	Min.	Max.	Unit
TA	Ambient temperature during operation	-40	85	℃
TS	Ambient temperature during storage	-55	125	℃
VCC	Supply voltage (VCC is connected to the power supply, GND is grounded)	-0.5	6.0	V

VIO	Voltage on the input or output pins	-0.5	VCC+0.5	V
IMdig	Continuous drive current of single DIG pin	0	180	mA
IMseg	Continuous drive current of single SEG pin	0	30	mA
IMall	Total continuous drive current of all SEG pins	0	200	mA

7.2. Electrical Parameters

Test Conditions: TA=25°C, VCC=5V

Name	Parameter description	Min.	Typ.	Max.	Unit
VCC	Power supply voltage	2.8	5	5.3	V
ICC	Current of power supply	0.5	80	150	mA
VILseg	Low level input voltage of SEG pin	-0.5		0.5	V
VIHseg	High level input voltage of SEG pin	1.8		VCC+0.5	V
VIL	Remaining pins low level input voltage	-0.5		0.8	V
VIH	Remaining pins high level input voltage	2.0		VCC+0.5	V
VOLdig	Low level output voltage of DIG pin (-150mA)			0.8	V
VOHdig	High level output voltage of DIG pin (4mA)	4.2			V
VOLseg	Low level output voltage of SEG pins (-10mA)			0.8	V
VOHseg	High level output voltage of SEG pins (25mA)	4.2			V
VOL	Low level output voltage of other pins (-4mA)			0.5	V
VOH	High level output voltage of other pins (4mA)	4.5			V
VOHdo	High level output voltage of DOUT pin (1mA)	4.2			V
IDN1	Pull-down input current of SEG pin	-25	-80	-400	uA
IDN0	Pull-down input current of RSTI pin	-60	-120	-200	uA
IUP1	Input current at the input terminal with the built-in pull-up resistor	15	50	300	uA
IUP2	Input pull-up current of DIN pin	50	100	200	uA
RDN	Resistance value (nonlinear equivalent value) of pull-down resistor		10		KΩ
VR	Default voltage threshold of power on reset	2.0	2.3	2.7	V

7.3. Internal Timing Parameters

Test Conditions: TA=25°C, VCC=5V, refer to the attached figure

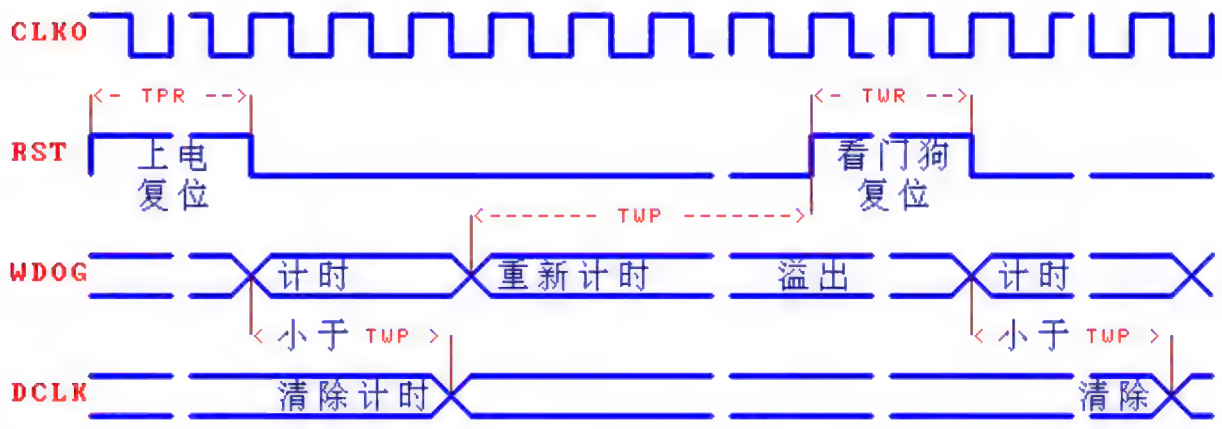

Name	Parameter description		Min.	Typ.	Max.	Unit
FCLKO	Clock frequency output by CLKO pin	CKHF=0	150	250	400	KHz
		CKHF=1	5	8	12	MHz
TPR	Reset pulse width generated during power on detection		70	140	350	mS
TWR	Reset pulse width generated by watchdog overflow		35	55	120	mS
TWP	Cycle of watchdog overflow		220	350	800	mS
TDP	Display scanning cycle (TWD* scanning limit)		2.5	4	6.5	mS
FSP	Frequency of flash display		0.6	2.2	3	Hz
TKS	Keyboard scanning interval, key response time		17	28	60	mS

7.4. Interface Timing Parameters

Test Conditions: TA=25℃, VCC=5V, refer to the attached figure

(Note: The unit of measurement in this table is nanosecond, namely, 10^{-9} seconds. If the maximum value is not indicated, the theoretical value can be infinite.)

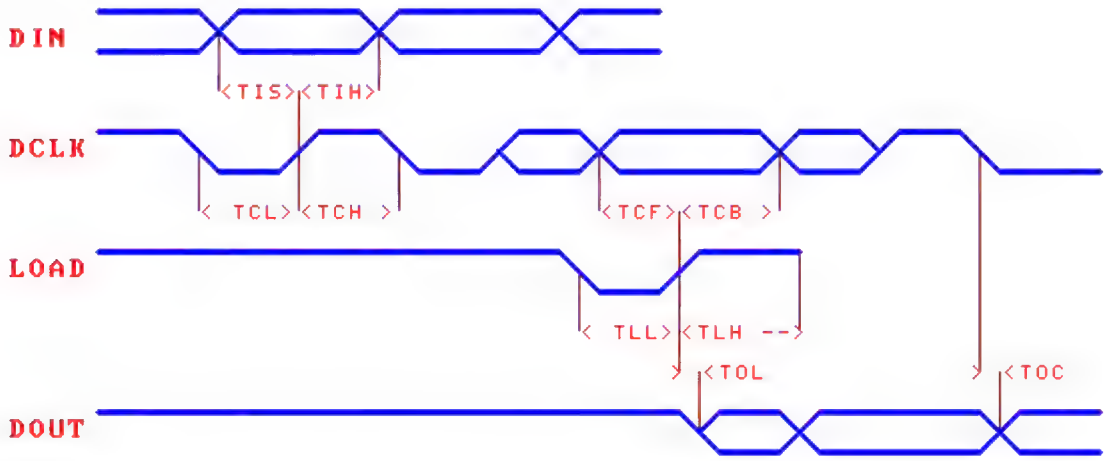

Name	Parameter description	Min.	Typ.	Max.	Unit
TIS	Setup time of DIN data input	25			nS

TIH	Hold time of DIN data input	10			nS
TCL	Low level width of DCLK clock signal	50			nS
TCH	High level width of DCLK clock signal	50			nS
TCF	DCLK stability time before the rising edge of LOAD	25			nS
TCB	DCLK stability time after the rising edge of LOAD	25			nS
TLL	Low level width of LOAD signal	100			nS
TLH	High level width of LOAD signal	100			nS
TOL	DOUT output delay after the rising edge of LOAD	2		25	nS
TOC	DOUT output delay after the falling edge of DCLK	2		25	nS
TE	DCLK, LOAD rising or falling time	0		15	nS

8. Application

8.1. Connection to MCU (Figure below)

CH451 is connected to the MCU through the serial interface. U2 (CH451S) provides the MCU U1 (51 series 89C2051) with the reset signal RESET and system clock signal SCLK. The MCU can also obtain the system clock signal with crystal oscillator if precise timing is required. Capacitors C2 and C3 are arranged near the power pins of U2 to decouple the power supply and reduce the interference caused by high drive current. When the keyboard function is not needed, the KEY signal line can be removed and only the DCLK, DIN and LOAD three signal lines can be used. When the keyboard function is used, the KEY signal line of DOUT pin of CH451 can be connected to the interrupt input pin of the MCU. If it is connected to the common I/O pin, the query mode should be used to determine whether CH451 has detected a valid key.

Since some I/O pins of the standard MCS51 MCU is weak pull-up quasi bidirectional ports, it is recommended to add the pull-up resistors to DIN, DCLK and LOAD to reduce interference in the circuit that is remotely connected to CH451. The resistance of the pull-up resistor can be 1KΩ to 10KΩ and the pull-up resistor is not required for the close range. The farther the distance, the smaller the resistance should be.

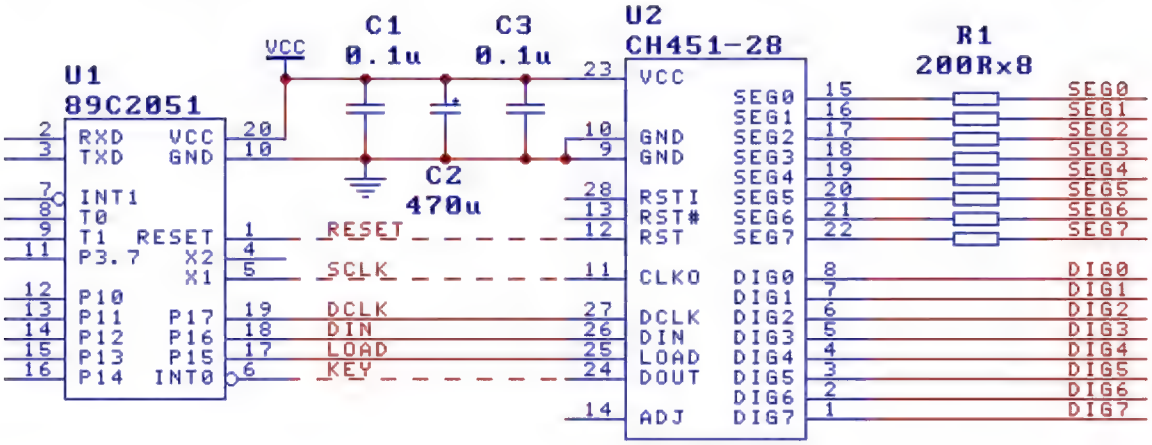

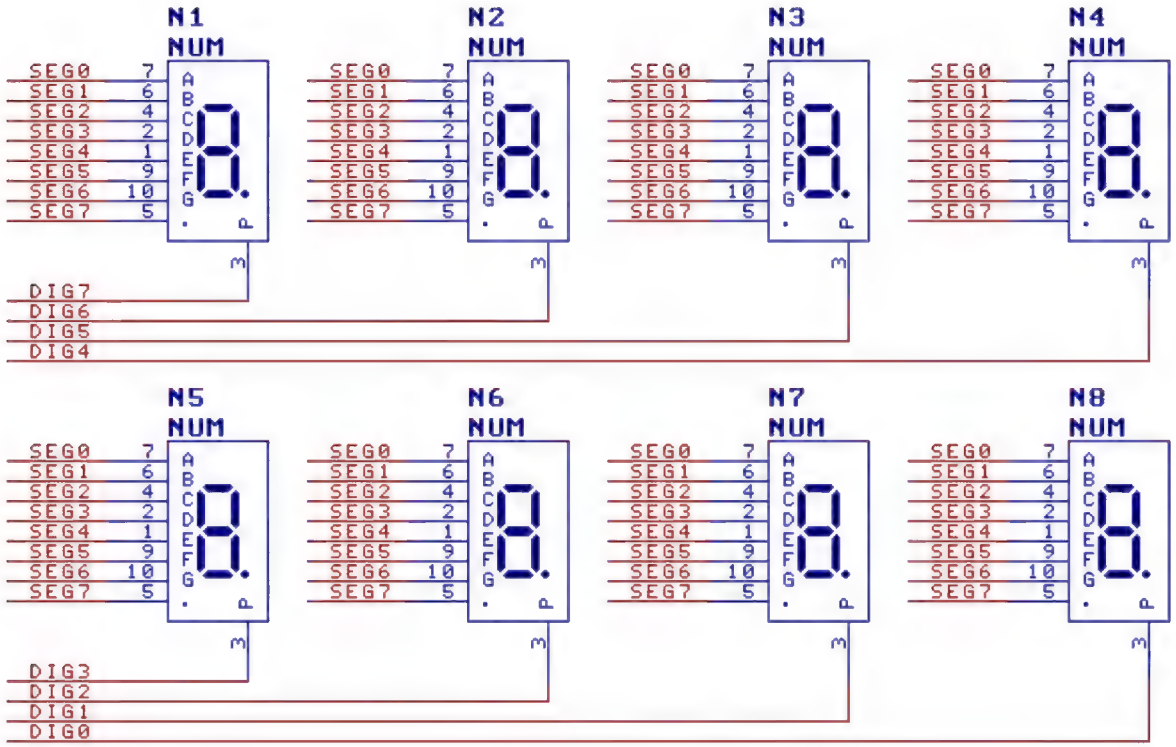

8.2. Drive LED nixie tube (as Shown Above)

CH451 can drive 8 common cathode LED nixie tubes dynamically. After the pins on the same segments of all LED nixie tubes are connected in parallel (segments A-G and decimal point), they are connected with the segment drive pins SEG0~SEG7 of CH451 through a series current limiting resistor R1. The cathodes of the LED nixie tube are driven by the pins DIG0~DIG7 of CH451 respectively.

If the segment current limiting LMTC function of CH451 is enabled, then the segment current limiting resistor R1 can be removed; otherwise, it is necessary to connect R1 in series for the segment drive pins to limit and balance the drive current of each segment. The greater the resistance of the series current limiting resistor R1 is, the smaller the segment drive current is, and the lower the display brightness of the LED nixie tube is. The resistance of R1 is generally between 60Ω and 1KΩ. Under the same other conditions, a higher resistance value should be preferred. At the supply voltage of 5V, the corresponding segment current is usually 13mA when the series resistance is 200Ω.

On the panel layout of the LED nixie tube, it is recommended that the order of the LED nixie tube from left to right is N1 to the left and N8 to the right, so as to match the word left and right shift commands and the word left and right cycle shift commands.

Please refer to the Data Manual of CH452 chip for the circuits that drive the large size LED nixie tube and the common anode LED nixie tube.

8.3. 8×8 Keyboard Scan (Figure below)

CH451 has a 64-key keyboard scan function. If only a few keys are needed in the application, then any unused keys can be removed from 8×8 matrix. In order to prevent short circuit from being formed between SEG signal line and DIG signal line to impact display after the key is pressed, the current limiting resistors R2 should be connected in series between CH451 DIG0~DIG7 and the keyboard matrix, and their resistance can be 2KΩ to 15KΩ.

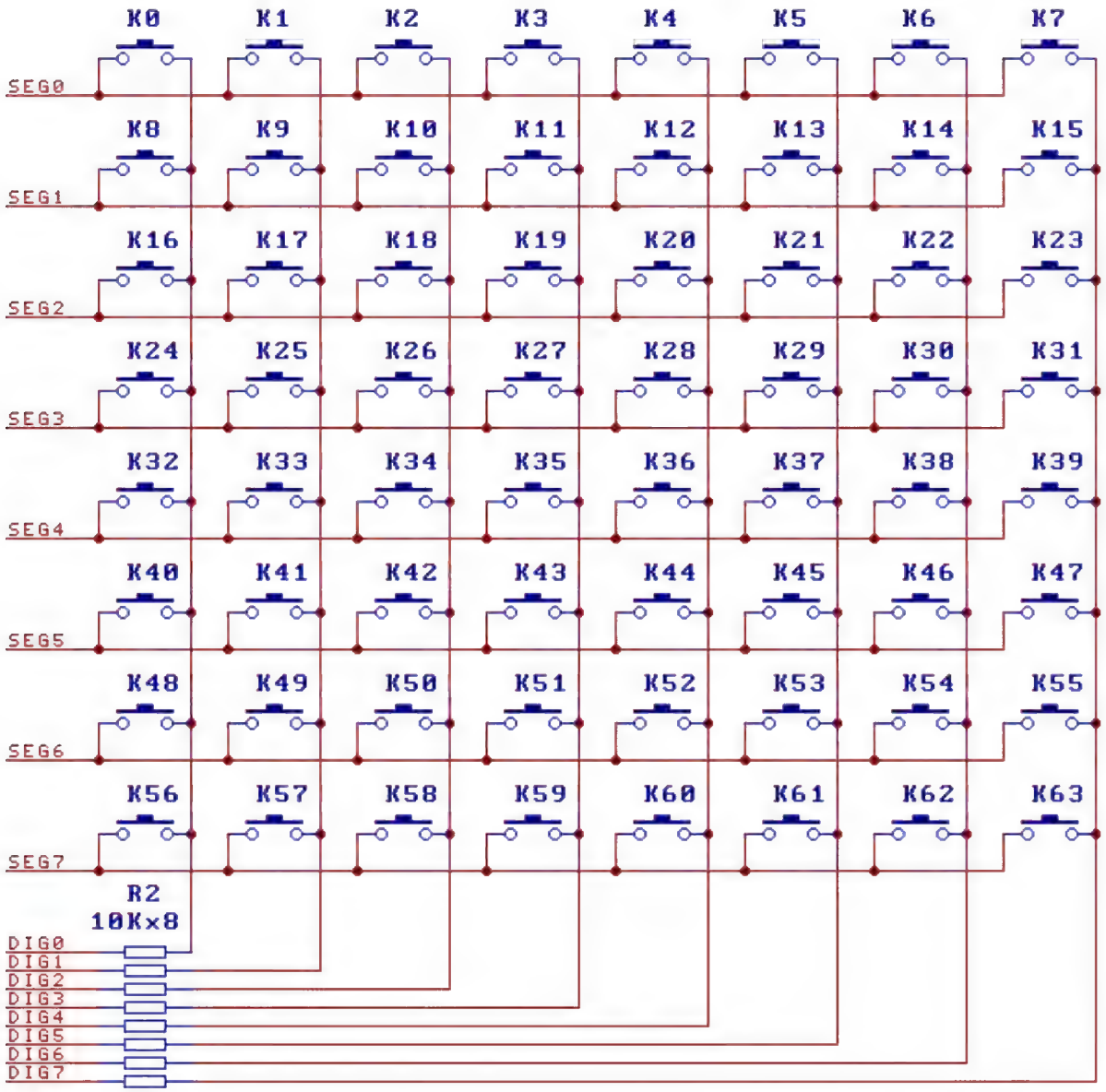

8.4. Complete Application Example (Figure below)

In the figure, the MCU U2 drives 8 common cathode LED nixie tubes through CH451 and scans 64 keys simultaneously. Due to the reverse leakage of some LED nixie tubes at high working voltage, it is easy to for CH451 to mistake that a key has been pressed down, so it is recommended to use LEDs D1~D8 to prevent the reverse leakage of LED nixie tubes, and to improve the level of input signals SEG0~SEG7 during keyboard scan to ensure more reliable keyboard scan. When the supply voltage is low (e.g. VCC=3.3V), these LEDs should be removed to avoid affecting the display brightness.

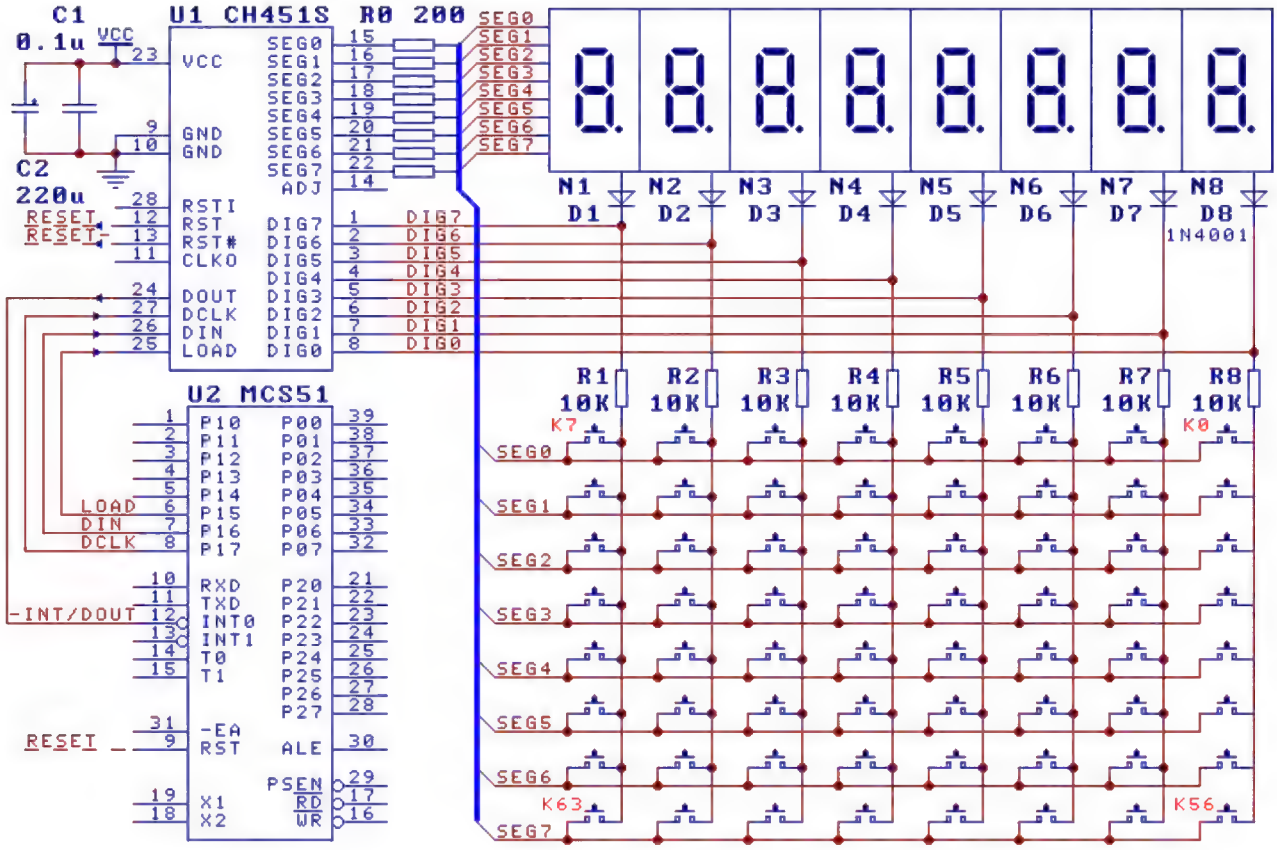

8.5. Multichip Cascade Application

When there are more than 8 LED nixie tubes, multiple CH451 can be used for driving. There are two ways to connect multiple CH451 with the MCU: one is in parallel. The MCU provides an independent LOAD signal line for each CH451, but DIN and DCLK signal lines are provided for all CH451 at the same time, that is, each LOAD signal line is equivalent to the chip selection line of each CH451. Second is in series. The MCU provides DCLK and LOAD signal lines for all CH451 at the same time, and it only provides DIN with the first stage CH451, and DIN of the post stage CH451 is connected to the DOUT pin of the front stage CH451.

For long-distance transmission or practical application of multiple CH451 pins driven by the MCU, it is necessary to ensure reliable connection of the low resistor in the common ground wire, and the driving ability of MCU I/O pins may need to be considered, and the signal buffer drive circuit can be increased if necessary.

8.5.1. Parallel Application (Figure below)

In the figure, 24 LED nixie tubes are driven by the parallel cascade mode. U8 (51 series MCU) provides a set of shared DIN and DCLK signals for all CH451, and a LOAD signal line to each CH451. When U9 needs to be operated, the MCU can output serial data through DIN and DCLK, and then output the load signal to U9 through LD1 to make it perform operation, while U10 and U11 fail to receive LOAD signal, so there is no operation. In parallel mode, each CH451 can enable the keyboard function, and the operation process is simpler than that in series mode.

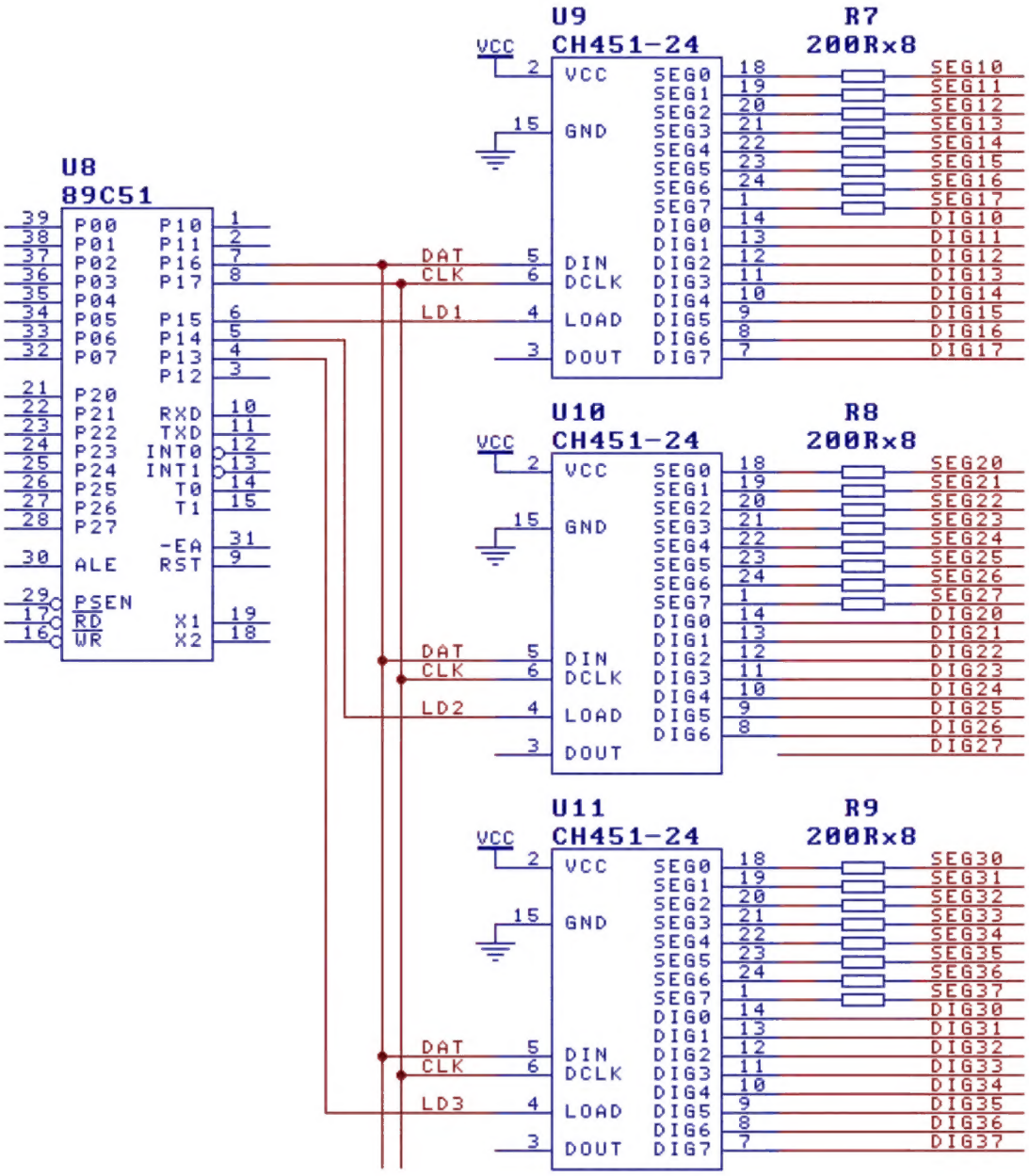

8.5.2. Serial Application (Figure below)

In the figure, the LED dot matrix of LED is driven by the serial cascade mode, and U3 (PIC series MCU) controls all CH451 through three signal lines, i.e. DIN1, DCLK and LOAD. Refer to the 16×16 layout diagram, 4 8×8 LED arrays L1 ~ L4 form a 16×16 dot matrix module. If a Chinese character needs to be displayed, only the 32-byte dot matrix data needs to be sent to CH451 through 8 48-bit word-data loading commands. Since 4 CH451 cascade, each operation command must be 48-bit data, followed by the command data of U7, U6, U5 and U4. Finally, the output rising edge of LOAD signal line informs all CH451 to load their respective command data. In series mode, the number of CH451 cascades is not limited, and only 3 I/O pins are occupied, among which DIN and DCLK can also be shared with other interface circuits. The disadvantage is that only the CH451 in the last stage can enable the keyboard function, so the operation process is more complicated that in the parallel mode.

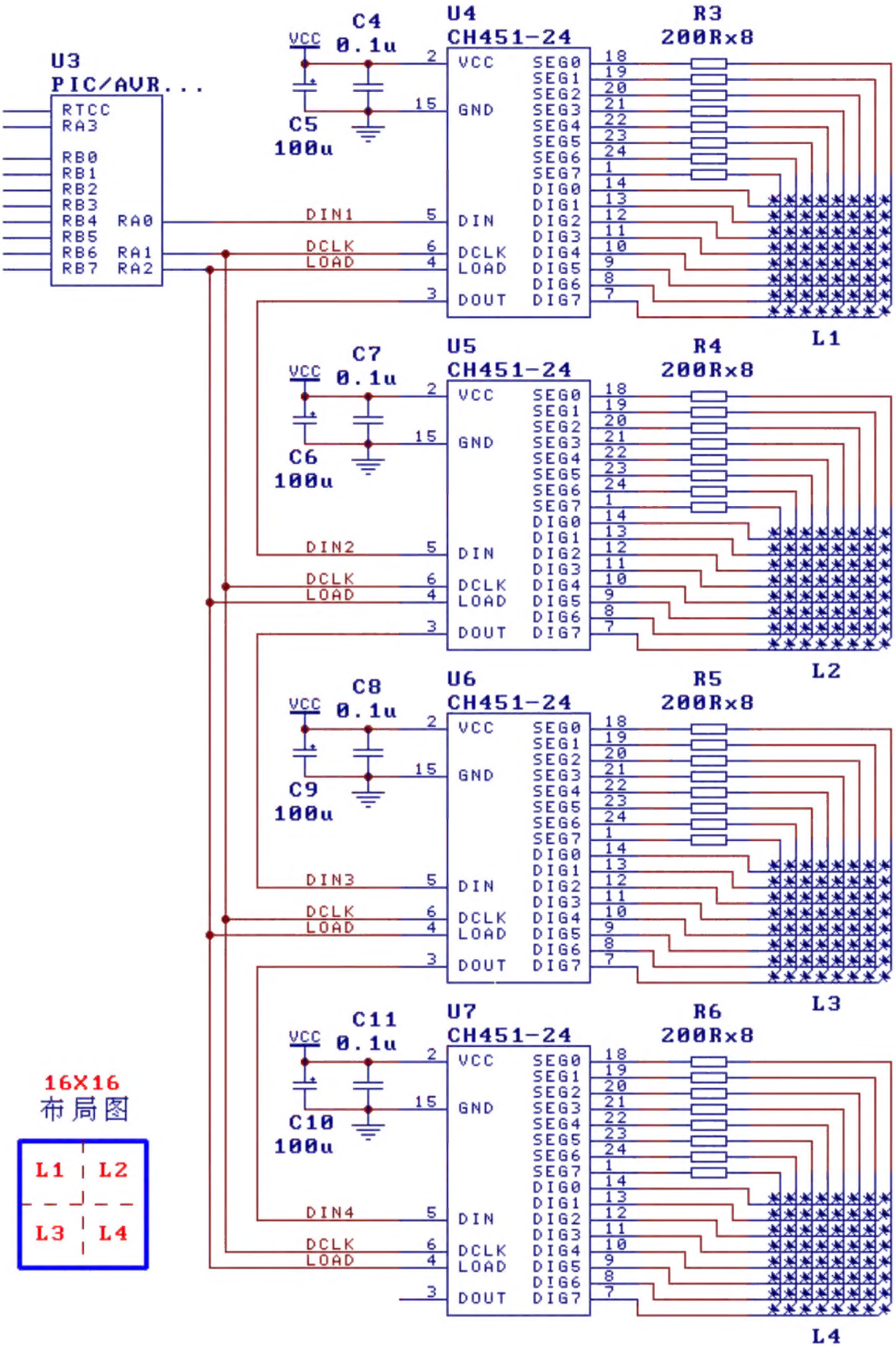

8.6. Set Segment Current Size

In addition to enabling segment current limiting LMTC function by setting the auxiliary parameter command, CH451 also supports external segment current upper limit adjustment. The ADJ pin for segment current upper limit adjustment is connected with strong pull-down resistor in the chip. If the ADJ pin is suspended

outside the chip, the default upper limit of the segment current can reach 80mA; therefore, in the application circuit, a set of current limiting resistors R1 need to be connected in series between the segment drive pins SEG7~SEG0 and the LED nixie tubes. In some specific applications where the PCB area and components volume are restricted, CH451 can also set the upper limit of segment current through a resistor Rseg instead of being connected to the current limiting resistor R1 in series, and then directly connect the LED nixie tube or other loads through the segment drive pins of CH451.

The resistor Rseg shall be bridge connected between the ADJ pin of CH451 and the positive power VCC. This resistor and the pull-down resistor inside CH451 shall divide the voltage of VCC and generate the control voltage of the segment current upper limit on ADJ pin. The effective range of control voltage is 0V to VCC minus 1V, namely 4V. When the control voltage is gradually adjusted from 0V to 4V, the upper limit of segment current will be gradually adjusted from the default 80mA to 0mA, and basically decreased linearly. The LED nixie tube is driven directly by CH451 at 5V supply voltage. Refer to the following table for the corresponding relation between the upper limit of segment current and the resistor Rseg.

Resistance value of Rseg	1KΩ	1.5KΩ	2KΩ	2.5KΩ	3KΩ	5KΩ	Disconnected
Upper limit of segment current	1mA	4mA	15mA	25mA	35mA	50mA	80mA

Special attention should be paid that if the segment current limit LMTC function is enabled or the current limiting resistor R1 is removed, the remaining voltage after the supply voltage minus the voltage drop of the LED will all fall on the CH451 chip, thus greatly increasing the power consumption of CH451 and even causing damage to CH451 due to overheat. Therefore, in general, a series current limiting resistor should be tried to be used to limit the segment drive current. If it is necessary for some applications to limit the segment drive current through segment current limit LMTC or resistor Rseg, the supply voltage of CH451 should be reduced as much as possible in order to reduce the power consumption of CH451.

8.7. Manual Reset

CH451 has a built-in power on reset function, which can provide power on reset signals to the MCU through the RST and RST# pins. During the normal operation of CH451, the RSTI pin can be used for manual reset input. When high level is input by RSTI, the CH451 chip is reset, and RST and RST# also output reset signals to the external circuits simultaneously.

The RSTI pin is extremely sensitive to noise, in order to reduce external interference, it is recommended to connect a capacitor between the RSTI pin and ground GND with a capacity from 100pF and 5000pF, especially the capacitor must be bridge connected when the RSTI is connected to the instrument panel as a manual reset input. If manual reset is not required, the RSTI pins can be directly short-connected to GND.

8.8. Anti-interference (Important)

As CH451 drives the LED nixie tube or LED has high current, high glitch voltage will be generated on the power supply. Therefore, if the PCB wiring of the power line or ground wire is not reasonable, it may affect the stability of the MCU or CH451. In particular, in the use of CH451 power on reset, watchdog and other monitoring functions, special consideration should be given to the large current interference with the CH451 or related analog circuits. Solutions to power interference:

① It is recommended to use shorter and thicker power line and ground wire, especially when CH451 and the MCU are arranged on two PCBs;

② The power supply decoupling capacitor is connected in parallel close to the CH451 between the positive and negative power supplies. At least one 0.1uF leaded multilayer ceramic capacitor or ceramic capacitor and one electrolytic capacitor with a capacity of not less than 100uF.

For external interference when the signal line is long, refer to the following figure for solution:

① At the pin end close to CH451 on the signal line, add the capacitors C15, C16 and C17 with the capacitance of 47pF to 470pF. If the capacitance is higher, the transmission speed of the communication interface for the MCU will be lower.

② Optionally add the resistors R12, R13 and R14 with resistance of 100~470Ω;

③ Reduce the transmission speed between the MCU and CH451 (because of added resistance and capacitance);

④ If it is driven by a quasi-bidirectional I/O pin (such as standard MCS51 MCU), it will be suggested to add resistors R15, R16 and R17 with resistance of 500Ω to 10KΩ to strengthen the pull-up capacity of the quasi-bidirectional I/O pin for MCS-51 MCU, so as to keep good digital signal waveform during long distance transmission. Pull-up resistors R15, R16 and R17 are not required for short signal lines, and pull-up resistors R15, R16 and R17 are not required for bidirectional I/O pins driven by totem pole.

In addition, for the application environment with strong interference, it is recommended to refresh CH451 regularly: ① Reset system parameters; ② Reset display parameters; ③ Reset flash control; ④ Reload each display data. This method has no side effects.

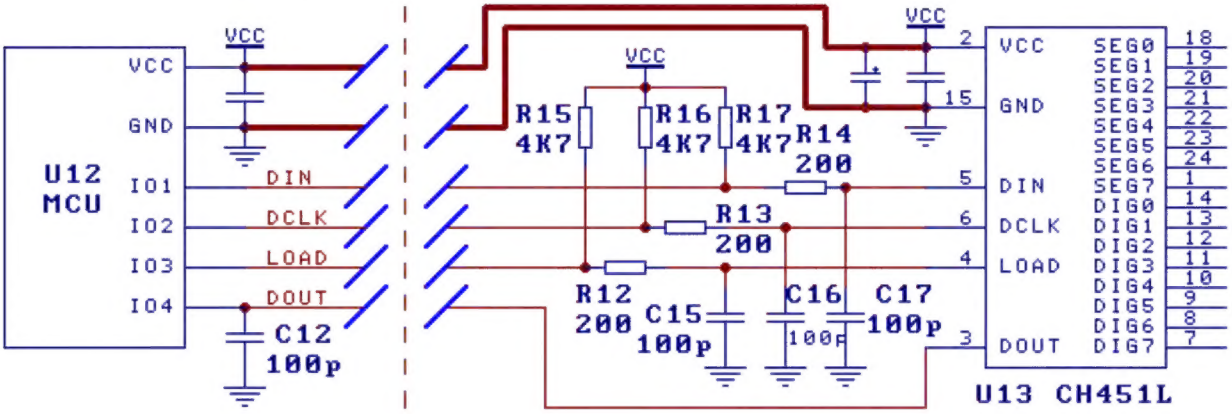

8.9. Interface Program of MCU

The website provides the interface program for the common MCU.